PRIME CONTRACT CHANGE ORDER
No. B20-029

Distribution To: Contractor _____
Field _____
Accounting _____

TITLE: RGN#192 - B20 - PCI#031 - Additional NETA Testing & Light Pole Credit

DATE: 12/15/2025

CONTRACT NO: 1

PROJECT: Loop Road West - B20 (CUP)

FROM: Suffolk Construction Company, Inc.
50 Rockefeller Plaza, Suite 203
New York, New York 10020

TO:

DESCRIPTION OF CHANGE

CE #044 - B20 - Additional NETA Testing & Light Pole Credit
This Change Order is for Scope of Work changes to the Subcontract of Verde Electric (B20-13), due to the response of RFI#B20-0363, which added additional NETA testing to Transformer #1. Please see RFI response included.

Additonally, Verde Electric's subcontractor damaged an existing light pole at the Transformer Yard. Verde installed one of the existing light poles stockpiled at the Transformer Yard to replace the damaged one. As such, included in this change order is a credit for the light pole.

CHANGE ORDER LINE ITEMS:

PCO # B20-029 : RGN#192 - B20 - PCI#031 - Additional NETA Testing & Light Pole Credit

#	Cost Code	Description	Type	Amount
1	33-330000.000 - Utilities	Verde - Additional Neta Testing	SUBCONTRACTOR	$ 5,927.93
~~2~~	~~33-330000.000 - Utilities~~	~~Verde - Replace Damaged Light Pole~~	~~SUBCONTRACTOR~~	~~($1,367.70)~~
			Subtotal:	~~$4,560.23~~
			Line 2: Contingency (2.5% of Subtotal):	~~114.01~~
			Line 3: Project Based Technology and Software (.11% of Subtotal+ Line 2):	~~5.14~~
			Line 4: SDI (1.25% of Enrolled Subcontractor Costs):	~~57.00~~
			Line 5: GLPD (1.9% of Subtotal + Lines 2 & 3):	~~88.91~~
			Line 6: CM Fee (2.9% of Subtotal + Lines 2 & 3):	~~135.70~~
			Grand Total:	~~$4,960.99~~

$6,448.88

This change order does not waive Contractor's entitlement to an extension of the Contract Time associated with the Work covered herein or an additional increase to the Contact Sum for any costs not explicitly included herein, all of which are reserved.

ACCEPTED:

By: _____

Date: _____

89 Edison Avenue
Mt Vernon, New York 10550
Phone 914-664-7000
Facsimile 914-668-7997

Change Order Request

6521 — Regeneron TTCX

COR Subject: Re-Testing of Xfmr #1 in Con Ed Yard

To **Richard Alcaro**
Suffolk Construction

Return To **Michael Lentini**
Verde Electric Corp
mlentini@verdeelectric.com

COR Number: **6521-019**
COR Revision Number: **2**
COR Date: 10/24/2025
Work Type: Field Work Order / T&M
Owner COR No: 019
Days Valid: **5**

Scope Of Work / Time Extension Request

Tis C.O. is for Item No. 1 on the attached estimate from SNEET

Details

Description	Cost / Rate	Qty / Hrs	Workers	Ext	
Electrical Journeyman Local 3 North	$135.59	8.00 *Hrs*	1.00	$1,084.72	ok
SNEET	$4,070.00	1.00	-	$4,070.00	ok

Breakout

this is for TX1 only

Labor :	$1,084.72	ok
Overhead Percent @ 15%:	*$162.71*	ok
Subcontractor :	$4,070.00	ok
Overhead Percent @ 15%:	*$610.50*	ok
Total:	**$5,927.93**	ok

Reservation of Rights

This COR does not include any amount for impacts such as interference, disruptions, rescheduling, changes in the sequence of work, delays and/or associated acceleration. We expressly reserve the right to submit our request for any of these items.
Verde Electric Corp reserves all rights under the Prime Contract, Subcontract, at law, and inequity. Verde Electric Corp further reserves all right to supplement the information contained in this letter."

Signed By: _____ **Dated:** 10/24/2025

SOUTHERN NEW ENGLAND
ELECTRICAL TESTING LLC
3 Buel Street Unit 4, Wallingford, CT 06492
203-269-8778 office 203-269-8775 fax
www.sneet.org

PROPOSAL 25-105d

November 12, 2025

Michael Lentini
Project Manager
Verde Electric Corp.
89 Edison Ave
Mt. Vernon, NY 10550
(914) 664-7000
Mlentini@verdeelectric.com

Reference: Regeneron TTCX Loop Road – Damaged Transformer Re-Tests, Cable Tests, Con-Ed Metering Tests, Tarrytown NY

Dear Mike:

Thank you for the opportunity to provide you with this quote. Our employees come to you with combined experience of over 100 years in the electrical field performing acceptance, maintenance and professional services. We are an independent electrical testing company with technicians trained to NETA specifications.

This COR is for retesting TX1 only

Specification: Approved Testing Submittal – Transformers, Liquid-Filled, Cables, Medium-Voltage

The Following is Included:

1. Transformer#1
   a. Qty 1 – Liquid-Filled Transformer, Medium-Voltage, Rating:13.8KV/10MVA (AFTER RADIATOR CHANGE)
      i. Qty 1 – Oil Analysis
      ii. NOTE: Insulation Resistance/DAR/PI/Overall Power Factor/Oil Re-Sample

Price for Item#1 above based on One (1) Mobilization and Straight Time Labor: $4,070.00

2. Transformer#2
   a. Qty 1 – Liquid-Filled Transformer, Medium-Voltage, Rating:13.8KV/10MVA (AFTER XO BUSHING REPAIR)
      i. Qty 1 – Oil Analysis
      ii. NOTE: Insulation Resistance/DAR/PI/Overall Power Factor/Winding Resistance/Oil Re-Sample

Price for Item#2 above based on One (1) Mobilization and Straight Time Labor: $2035.00

3. Con Ed Service Cables (Re-Mobilization):
   a. Qty 12 – Single-Conductor MV Cable VLF Withstand Test, Rating:15KV (CON ED FEEDERS: 19W14 (TO BKR P-1, 19W23 TO BKR P-2, 19W05 TO BKR P-3, 19W30 TO BKR P-3)

Price for Item#3 above based on One (1) Mobilization and Straight Time Labor: $4,070.00

SCOPE CONTINUED:

4. Con Ed Metering CT's & PT's Re-Mobilization
   a. Qty 12 – Instrument Transformer, Voltage Transformer, Rating: 14.4KV-120VAC (P1/P2/P3/P4 PROTECTION PT'S)
   b. Qty 24 – Instrument Transformer, Current Transformer, Multi-Ratio, Rating:600:5 (P1/P2/P3/P4 PROTECTION CT'S)

Price for Item#4 above based on One (1) Mobilization and Straight Time Labor: $2035.00

Responsibilities

- Customer will provide written authorization to perform services as described in this proposal.
- Customer will notify SNEET of any requirements or documents prior to the start of service.
- Customer will provide entrance passes to the work location.
- Customer will inform SNEET of safety meetings, any mandatory meeting, and safety data sheet (SDS) requirements, etc.
- Customer will provide one or more representative and rigging available on site with SNEET personnel for consultation and to assist with equipment locating.
- Customer will provide a qualified electrician for panel cover removal.
- Customer will perform all switching required to de-energize and re-energize the equipment for all services.
- Customer is responsible for costs and arranging of any utility outages required.
- Customer will provide all necessary drawings, protective device settings, and manufacturer's instruction manuals.
- SNEET will provide test power (120VAC).
- Pricing includes delivery of 1 Test Report 2 weeks after completion. If expedited or multiple Test Reports are required, additional charges may be applied.

This proposal is provided to you as a confidential agreement between SNEET and the customer, and is not to be disclosed with others. This proposal is valid for a period of ninety (90) days from the date of the proposal. Any applicable taxes are not included in the project cost.

We thank you for the opportunity to assist you with this project. Please include our proposal number on all references to this project.

x Aaron Freyler
Aaron Freyler
Business Development

x
Buyer's Signature

Southern New England Electrical Testing LLC Terms and Conditions

Southern New England Electrical Testing LLC is herein referred to as “SNEET”. The person or entity purchasing services or equipment is herein referred to as “Buyer”. These terms and conditions, the attendant quotation or acknowledgment, and all documents incorporated by reference therein, bind the company(s) that issues the quotation or acknowledgement for the provision of electrical testing services to be provided hereunder by SNEET (Service Provider), and the Buyer, (Buyer), and constitute the entire agreement (Agreement) between Service Provider and Buyer regarding such provision of services.

1. ORDER ACCEPTANCE: Performance of any services or the supply of equipment ("services") by Service Provider is expressly conditioned upon the terms and conditions herein. Issuance of an order by Buyer for services or equipment shall constitute Buyer assent to these terms and conditions and any contrary terms in Buyer’s order or otherwise shall not be binding upon Service Provider.

2. PRICES: Prices quoted by Service Provider shall remain in effect for the period stated in Service Provider’s written quotation or proposal, or, if none is stated, for ninety (90) days after the date of the quotation. If Service Provider does not receive an order from Buyer within the effective period, Service Provider may change prices for services to those in effect at the time an order is received. Prices do not include any sales, use, excise, value added or similar taxes. Taxes shall be the responsibility of Buyer and Service Provider shall include them on all invoices, absent receipt of an appropriate exemption from Buyer.

3. TERMS OF PAYMENT: Buyer shall be billed monthly. Service Provider, at its discretion, may require monthly progress payments for services requiring more than thirty (30) days to complete. Payment terms are net thirty (30) days from date of invoice. Payments not received within thirty (30) days of date of invoice shall be subject to a late payment charge of one and one-half percent (1½%) or the maximum rate allowed by law, whichever is lower, and/or Service Provider may suspend performance of services without liability to Buyer until payment of any overdue amount is made in full, including any interest charge. Service Provider reserves the right to demand different payment terms if Service Provider determines that circumstances warrant such measures. Buyer shall be liable to Service Provider for all expenses relating to the collection of past due amounts.

4. CHANGES: Any changes affecting the Services, or otherwise affecting the scope of work must be accepted by Service Provider and resulting adjustment to price, schedule, or both, mutually agreed in writing.

5. EXCUSE OF PERFORMANCE: Service Provider shall not be liable or responsible for cost, expense, or damage due to a delay in performance of services or other obligations when such delay is due to causes beyond Service Provider’s reasonable control, including, but not limited to, natural disasters, acts of government, power failure, acts of God, labor disputes, acts or war, or material or transportation shortage.

6. TERMINATION AND SUSPENSION BY SERVICE PROVIDER: Service Provider may cancel any order or terminate any agreement without liability to Buyer if Buyer fails to meet the conditions specified herein, or if Buyer becomes insolvent or bankrupt. Buyer may cancel orders only upon reasonable advance written notice to Service Provider and upon payment to Service Provider of Service Provider’s cancellation charge, which include all costs and expenses incurred by Service Provider in the course of performance under an order or agreement and amounts adequate to cover any commitments made by Service Provider.

7. BUYER RESPONSIBILITIES: Buyer shall provide Service Provider ready access to the site where services are to be performed and adequate workspace and facilities to perform same as provided in these Service Provider terms and conditions. Buyer shall not require Service Provider or its employees, as a condition to site access or otherwise, to further agree or enter into any agreement, which waives, releases, indemnifies or otherwise limits or expands any rights or obligations whatsoever. Any such agreements shall be null and void. Buyer shall inform Service Provider, in writing, at the time of order placement, of any known hazardous substance or condition at the site, including, but not limited to, the presence of asbestos or asbestos containing materials, and shall provide Service Provider with any applicable Material Data Safety Sheets regarding same. Buyer shall appoint a representative familiar with the site and the nature of the services to be performed by Service Provider to be present at all times that Service Provider personnel are at the site. Service Provider shall not be liable for any expenses incurred by Buyer in removing, replacing or refurbishing any Buyer equipment or any part of Buyer’s building structure that restricts Service Provider access. Buyer personnel shall cooperate with and provide all necessary assistance to Service Provider. Unless otherwise agreed to by Service Provider, Buyer shall arrange for utility outage, site lighting and power as may be needed in the course of Service Provider performance of services. Service Provider shall not be liable or responsible for any work performed by Buyer. **Service Provider shall not perform any electrical power switching unless specifically requested by Buyer, and under the supervision of the Buyer. Notwithstanding Buyer’s request, Service Provider may refuse to perform power switching, if in the opinion of Service Provider, such action would be unsafe. IN THE EVENT THAT SERVICE PROVIDER PERFORMS POWER SWITCHING, TO THE FULLEST EXTENT PERMITTED BY LAW, BUYER SHALL INDEMNIFY, DEFEND, AND HOLD SERVICE PROVIDER HARMLESS FROM ANY AND ALL LIABILITY, ACTIONS, SUITS, CLAIMS, DEMANDS, DAMAGES, COSTS, AND EXPENSES ("LOSSES") ARISING OUT OF OR IN ANY WAY CONNECTED WITH OR RESULTING FROM SERVICE PROVIDER'S PERFORMANCE OF POWER SWITCHING, REGARDLESS OF WHETHER THE LOSSES RESULT FROM SERVICE PROVIDER'S NEGLIGENCE (WHETHER ACTIVE OR PASSIVE, AND WHETHER SOLE, JOINT, OR CONCURRENT) OR GROSS NEGLIGENCE, AND EVEN THOUGH CAUSED IN WHOLE OR IN PART BY A PRE-EXISTING DEFECT, STRICT LIABILITY, OR OTHER LEGAL FAULT OF SERVICE PROVIDER. THIS INDEMNITY SHALL APPLY TO ANY ACTS OR OMISSIONS, WILLFUL MISCONDUCT, OR NEGLIGENT CONDUCT, WHETHER ACTIVE OR PASSIVE, ON THE PART OF EITHER THE SERVICE PROVIDER OR THE BUYER.** If OSHA or any other federal, state or local government, trade association, or contractual regulations or standards require a “safety person” to be on site during the performance of services, or in the event of a trade union jurisdictional dispute where trade union represented personnel are required to assist or stand by during the performance of services by Service Provider, Buyer shall be responsible for providing for and paying for any charge or wages for such person(s), as applicable.

8. HIRING OF EMPLOYEES: Buyer agrees that during the execution of the Services by Service Provider and for a period of twelve (12) months after performance of the services, it will not hire any employee(s) of Service Provider and will not entice or counsel any such employee(s) to leave Service Provider’s employ. Buyer agrees that this covenant shall extend to its agents and affiliates. In the event that an employee of Service Provider is hired or leaves the employ of Service Provider in such circumstances, the Buyer shall pay Service Provider, as compensation for
the cost incurred by Service Provider in recruiting and training the employee, the sum equivalent to six (6) months pay for each employee hired from or leaving the employment of Service Provider.

9. GENERAL PROVISIONS: These terms and conditions shall be governed by and performance construed in accordance with the laws of the State of Connecticut. If any section or part of these terms and conditions is or becomes illegal, unenforceable or invalid, then such part or section shall be struck and shall not affect the remaining parts or sections. These terms and conditions represent the entire, final and complete agreement between the parties with respect to the subject matter herein and supersede all prior or contemporaneous oral or written communications, representations or agreements relating to this subject. Only a writing signed by both parties may modify these terms and conditions.

10. NUCLEAR AND RELATED APPLICATIONS: GOODS AND SERVICES SOLD HEREUNDER ARE NOT FOR USE IN ANY NUCLEAR AND RELATED APPLICATIONS. Buyer accepts goods and services with the foregoing understanding, agrees to communicate the same in writing to any subsequent purchasers or user and to defend, indemnify, and hold harmless Service Provider from any claims, losses, suits, judgments and damage, including incidental and consequential damage, arising from such use, whether the cause of action be based in tort, contract or otherwise, including allegations that the Seller's liability is based on negligence or strict liability.

11. LIMITED WARRANTY: Service Provider warrants to Buyer that the services that it will perform are to be by trained personnel using proper equipment and instrumentation for the particular service. Service Provider warrants that any analysis of data, subsequent recommendations and other services will be in accordance with applicable established industry standards and practices. Service Provider shall warrant the proper performance of the services for a period of one (1) year from the completion of the services. Warranties applicable to third party equipment, parts or materials furnished by Service Provider shall be that of the manufacturer of such equipment, parts or materials and only to the extent assignable to Buyer. EXCEPT AS SPECIFICALLY PROVIDED FOR ABOVE, SERVICE PROVIDER EXTENDS NO WARRANTIES OF ANY KIND FOR THIRD PARTY SERVICES, EQUIPMENT OR MATERIALS AND SERVICE PROVIDER DOES NOT MAKE ANY REPRESENTATIONS OR WARRANTIES OF ANY KIND, EXPRESS OR IMPLIED, AS TO MERCHANTABILITY, FITNESS FOR PARTICULAR PURPOSE, OR ANY OTHER MATTER WITH RESPECT TO ANY OF THE GOODS OR SERVICES.

These warranties do not extend to any losses or damages due to misuse, accident, abuse, neglect wear and tear, negligence (other than Service Provider’s), unauthorized modifications or alteration, use beyond rate capacity, or improper installation, maintenance or application. To the extent that Buyer or its agents has supplied specifications, information, representations of operating conditions or other data to Service Provider in the selection or design of the equipment and the preparation of Service Provider’s quotation, and in the event the actual operating conditions or other conditions differ from those represented by Buyer, and warranties or other provisions contained herein which are affected by such conditions shall be null and void.

If within thirty (30) days after Buyer’s discovery of any warranty defects within the warranty period, Buyer notifies Service Provider thereof in writing, Service Provider shall, at its option, repair, correct or replace F.O.B. point of manufacture, or refund the purchase price for, that portion of the services or equipment found by Service Provider to be defective. Failure by Buyer to give such written notice within the applicable time period shall be deemed an absolute and unconditional waiver of Buyer’s claim for such defects. Equipment repaired or replaced during the warranty period shall be covered by the foregoing warranties for the remainder of the original warranty period or ninety (90) days from the date of shipment, whichever is longer.

12. INSURANCE: Service Provider shall maintain the following insurance or self-insurance coverage: **Worker’s Compensation** in accordance with the statutory requirements of the state in which the work is performed. **Employer’s Liability** with a limit of liability of $1,000,000 per occurrence for bodily injury by accident or bodily injury by disease. **Commercial General Liability (CGL)** for bodily injury and property damage with a limit of $1,000,000 per occurrence and aggregate. CGL includes Contractual Liability. CGL does not include Products and Completed Operations coverage. **Automobile Liability** insurance that covers usage of all owned, non-owned and leased vehicles and which is subject to a combined single limit per occurrence of $1,000,000. Automobile Liability insurance includes Contractual Liability and Cross Liability, but no special endorsements.

13. INDEMNITY: Each party shall indemnify and hold the other party harmless from loss, damage, liability or expense resulting from damage to property of a third party, or injuries, including death, to third parties to the extent caused by a negligent act or omission of the party providing indemnification or a party’s subcontractors, agents or employees during performance of services hereunder. Such indemnification shall be reduced to the extent attributable to others. The indemnifying party shall defend the other party in accordance with and to the extent of the above indemnification, provided that the indemnifying party is: i) promptly notified by the other party, in writing, of any claims, demands or suits for such damages or injuries; ii) given all reasonable information and assistance by the other party; iii) given full control over any resulting negotiation, arbitration or litigation, or the indemnifying party’s obligations herein shall be deemed waived. The indemnification obligations under this section shall survive the termination or expiration of an order or contract between the parties for a period of five (5) years.

14. LIMITATION OF REMEDY AND LIABILITY: SERVICE PROVIDER SHALL NOT BE LIABLE FOR DAMAGES CAUSED BY DELAY IN PERFORMANCE. THE SOLE AND EXCLUSIVE REMEDY FOR BREACH OF WARRANTY HEREUNDER SHALL BE LIMITED TO REPAIR, CORRECTION, REPLACEMENT OR REFUND OF PURCHASE PRICE UNDER THE LIMITED WARRANTY CLAUSE IN SECTION 11. IN NO EVENT, REGARDLESS OF THE FORM OF THE CLAIM OR CAUSE OF ACTION (WHETHER BASED IN CONTRACT, INFRINGEMENT, NEGLIGENCE, STRICT LIABILITY, OTHER TORT OR OTHERWISE), SHALL SERVICE PROVIDER’S LIABILITY TO BUYER AND/OR ITS CUSTOMERS EXCEED THE PRICE TO BUYER OF THE SERVICES PROVIDED BY SERVICE PROVIDER GIVING RISE TO THE CLAIM OR CAUSE OF ACTION. BUYER AGREES THAT IN NO EVENT SHALL SERVICE PROVIDER’S LIABILITY TO BUYER AND/OR ITS CUSTOMERS EXTEND TO INCLUDE INCIDENTAL, CONSEQUENTIAL OR PUNITIVE DAMAGES. THE TERM “CONSEQUENTIAL DAMAGES” SHALL INCLUDE, BUT NOT BE LIMITED TO, LOSS OF ANTICIPATED PROFITS, LOSS OF USE, LOSS OF REVENUE AND COST OF CAPITAL.

Initiating document

Suffolk Construction Company, Inc.
50 Rockefeller Plaza, Suite 203
New York, New York 10020

Project: 224065 Loop Road West - B20 (CUP)
555 Old Saw Mill River Road
Tarrytown, New York 10591

RFI #B20-0363: Electrical - Transformers & NETA Testing

Revision	0	**Status**	Closed on 10/14/25
To	Fladmadca (Flad Architects (NEW YORK))	**From**	Tyler Natelli (Suffolk Construction) 50 Rockefeller Plaza Suite 203 New York, New York 10020
Date Initiated	Sep 23, 2025	**Due Date**	Oct 2, 2025
Location	ConEd Yard	**Project Stage**	
Cost Impact	Yes (Unknown)	**Schedule Impact**	
Spec Section		**Cost Code**	
Drawing Number		**Reference**	
Linked Drawings			
Attachments (Sketch/ASI/ESI)		**Trade Partner RFI #**	
Received From	Mike Lentini (Verde Electric Corporation (MOUNT VERNON))	**Sub Job**	
Copies To	Richard Alcaro (Suffolk Construction), Fergal Hayes (Regeneron Pharmaceuticals, Inc. (TARRYTOWN)), Daniel Heim (Suffolk Construction), Paolo Marini (Suffolk Construction), Tyler Natelli (Suffolk Construction), John Riggs (Suffolk Construction), Tyler Saponara (Suffolk Construction), Elie Schmukler (Suffolk Construction), Jeffrey Simon (Suffolk Construction), Russell Sirico (Suffolk Construction), Kate Spata (Regeneron Pharmaceuticals, Inc. (TARRYTOWN))		

ADDITIONAL FIELDS

Required Reviewers	**Urgency**

Activity

Question

Question from Tyler Natelli Suffolk Construction *on Tuesday, Sep 23, 2025 at 01:12 PM EDT*

Of the four transformers at the Transformer Yard, one had a leaking bushing and another has a damaged radiator fin. The NETA tester is scheduled to mobilize this coming Monday, 9/29, to begin testing at the Transformer Yard.
Please confirm whether we should proceed with NETA testing on 9/29. If testing is to proceed, please confirm which tests should be performed after the transformer repairs are completed.
For reference, attached are the scheduled testing plan for the transformers and an email from the NETA tester outlining their recommended post-repair tests.

Attachments
Transformers Liquid Filled.pdf, RFI 363 - SNEET Email.pdf

Official Response

Response from Fladmadca Flad Architects (NEW YORK) *on Friday, Oct 10, 2025 at 10:41 AM EDT*

BR+A Response:
Follow recommendations noted by Aaron Fryer's email dated 9/12/25 (included in the RFI backup) to Perform Insulation Resistance, Power Factor, and Oil Sample testing for Transformer #1.
Theresa Alcia, BR+A October 9 2025

Attachments
B20-RFI 363r2A Electrical - Transformers & NETA Testing.pdf

Official Response

Response from Richard Alcaro Suffolk Construction *on Monday, Oct 6, 2025 at 09:27 AM EDT*

Please further clarify:

Transformer #1: Confirmed: This transformer will be NETA tested prior to the radiator repair work.
Q1) Additional testing has been recommended by the NETA testing agency after the repair is made. Please confirm if that additional testing should be completed and what tests exactly are to be completed.

Transformer #2: Confirmed: This transformer will not be tested until cleared by Eaton to test.

Official Response

Response from Fladmadca Flad Architects (NEW YORK) *on Tuesday, Sep 30, 2025 at 03:51 PM EDT*

1)The SNEET letter satisfies that the NETA testing of Transformer #1 may proceed on 9/29.

2)Monarch was informed by Eaton's Factory that it is not advisable not to perform NETA test on transformer#2 in its current condition. Should the testing proceed against the manufactures recommendation it is at risk by the CM.
-Per Regeneron 9/29/2025/Update 9/30/205

Attachments
B20-RFI 363r1A Electrical - Transformers & NETA Testing_REV RESPONSE.pdf

Official Response

Response from Fladmadca Flad Architects (NEW YORK) *on Monday, Sep 29, 2025 at 02:36 PM EDT*

The SNEET letter satisfies that the NETA testing of Transformer #1 may proceed on 9/29. Per Monarch, Eaton's Factory has advised not to perform NETA test on transformer#2 at its current condition.
-Per Regeneron 9/29/2025

Attachments
B20-RFI 363r1A Electrical - Transformers & NETA Testing.pdf

Official Response

Response from Richard Alcaro Suffolk Construction *on Wednesday, Sep 24, 2025 at 10:15 AM EDT*

The NETA testing in question is not manufacture required testing; it is owner required 3rd party testing. As detailed in the email attached to the RFI, the NETA testing company stated that the testing can proceed as per the contract documents HOWEVER, they are recommending additional testing be performed after the repairs are complete.

We recommend performing the transformer testing before and after the repairs. The added testing is additional scope.

Please confirm we are to perform the NETA testing on the transformers before the repairs are complete and if the added testing is to be performed after the repairs are made. Please also confirm which testing is required, if any, after the repairs.

Official Response

Response from Fladmadca Flad Architects (NEW YORK) *on Wednesday, Sep 24, 2025 at 08:58 AM EDT*

BR+A Response:
1)Repair transformer per manufactures recommendation/instructions.
2)Test transformer per the manufacturers recommended test procedure.
B. Lynch, BR+A September 23 2025

Attachments
B20-RFI 363A Electrical - Transformers & NETA Testing_RESPONSE.pdf

All Replies

Response from Fladmadca Flad Architects (NEW YORK) *on Friday, Oct 10, 2025 at 10:41 AM EDT*

BR+A Response:
Follow recommendations noted by Aaron Fryer's email dated 9/12/25 (included in the RFI backup) to Perform Insulation Resistance, Power Factor, and Oil Sample testing for Transformer #1.
Theresa Alcia, BR+A October 9 2025

Attachments
B20-RFI 363r2A Electrical - Transformers & NETA Testing.pdf

Response from Richard Alcaro Suffolk Construction *on Monday, Oct 6, 2025 at 09:27 AM EDT*

Please further clarify:

Transformer #1: Confirmed: This transformer will be NETA tested prior to the radiator repair work.
Q1) Additional testing has been recommended by the NETA testing agency after the repair is made. Please confirm if that additional testing should be completed and what tests exactly are to be completed.

Transformer #2: Confirmed: This transformer will not be tested until cleared by Eaton to test.

Response from Fladmadca Flad Architects (NEW YORK) *on Tuesday, Sep 30, 2025 at 03:51 PM EDT*

1)The SNEET letter satisfies that the NETA testing of Transformer #1 may proceed on 9/29.

2)Monarch was informed by Eaton's Factory that it is not advisable not to perform NETA test on transformer#2 in its current condition. Should the testing proceed against the manufactures recommendation it is at risk by the CM.
-Per Regeneron 9/29/2025/Update 9/30/205

Attachments
B20-RFI 363r1A Electrical - Transformers & NETA Testing_REV RESPONSE.pdf

Response from Fladmadca Flad Architects (NEW YORK) *on Monday, Sep 29, 2025 at 02:36 PM EDT*

The SNEET letter satisfies that the NETA testing of Transformer #1 may proceed on 9/29. Per Monarch, Eaton's Factory has advised not to perform NETA test on transformer#2 at its current condition.
-Per Regeneron 9/29/2025

Attachments
B20-RFI 363r1A Electrical - Transformers & NETA Testing.pdf

Response from Richard Alcaro Suffolk Construction *on Wednesday, Sep 24, 2025 at 10:15 AM EDT*

The NETA testing in question is not manufacture required testing; it is owner required 3rd party testing. As detailed in the email attached to the RFI, the NETA testing company stated that the testing can proceed as per the contract documents HOWEVER, they are recommending additional testing be performed after the repairs are complete.

We recommend performing the transformer testing before and after the repairs. The added testing is additional scope.

Please confirm we are to perform the NETA testing on the transformers before the repairs are complete and if the added testing is to be performed after the repairs are made. Please also confirm which testing is required, if any, after the repairs.

Response from Fladmadca Flad Architects (NEW YORK) *on Wednesday, Sep 24, 2025 at 08:58 AM EDT*

BR+A Response:
1)Repair transformer per manufactures recommendation/instructions.
2)Test transformer per the manufacturers recommended test procedure.
B. Lynch, BR+A September 23 2025

Attachments
B20-RFI 363A Electrical - Transformers & NETA Testing_RESPONSE.pdf

Suffolk Construction
Regeneron TTCX Loop Road Project

rev1

Contractor Name	**Verde Electric Corporation**
Labor Classification	Foreman
Union Affiliation	Local #3 North
Labor Rate Effective Until:	4/16/2026

Labor Rate Active

Summary -- Labor Rates					
	ST	OT	Holiday (If Applicable)	PT Differential	Holiday Differential (If Applicable)
Rate	$ 166.77	$ 222.88	$ 278.97	$ 56.11	$ 112.20

Instructions: Enter cells in yellow. Cells in blue are automatically calculated by multiplying the inputted percentage by the Base Rate. Trade Partner is free to modify the formulas in blue cells or hard enter as necessary. Subtotals and totals are automatically calculated and summarized above.

DETAIL

Description	Straight Time	Overtime	Holiday Time (If applicable)
Base Rate	$ 63.45	$ 95.18	$ 126.90

Benefits (Union and Non-Union) - *Provide itemized list of benefits. If Union Affliated, provide Union Agreements as part of your labor rate submission.*

	%	$	$	$
Joint Industry Board	2.450%	$ 1.55	$ 1.55	$ 1.55
Pension, Hospitalization, and Benefit Plan	39.450%	$ 25.03	$ 25.03	$ 25.03
Pension, Hospitalization, and Benefit Plan	$ 6.00	$ 6.00	$ 6.00	$ 6.00
Dental Fund	3.140%	$ 1.99	$ 1.99	$ 1.99
NEBF	3.000%	$ 1.90	$ 2.86	$ 3.81
Annuity Fund	$ 4.50	$ 4.50	$ 4.50	$ 4.50
Health Reimbursement Fund	$ 7.00	$ 7.00	$ 7.00	$ 7.00
Vacation, Holiday, Unemployment Plan	$ 0.31	$ 0.31	$ 0.31	$ 0.31
Deferred Salary Plan (401k)	23.650%	$ 15.01	$ 22.51	$ 30.01
Educational & Cultural Trust Fund	1.670%	$ 1.06	$ 1.06	$ 1.06
EESISP	0.500%	$ 0.32	$ 0.48	$ 0.63
		$ -	$ -	$ -
		$ -	$ -	$ -
		$ -	$ -	$ -
		$ -	$ -	$ -
		$ -	$ -	$ -
		$ -	$ -	$ -
		$ -	$ -	$ -
		$ -	$ -	$ -
		$ -	$ -	$ -
		$ -	$ -	$ -
Total Benefits		**$64.67**	**$73.29**	**$81.90**

Payroll Taxes - *Payroll taxes will properly reflect the federal and state payroll tax wage limitations establishing the annual maximum wages subject to payroll taxes*

	%	$	$	$
FICA/Social Security	7.650%	$ 4.85	$ 7.28	$ 9.71
SUI	0.000%	$ -	$ -	$ -
Medicare	0.000%	$ -	$ -	$ -
FUTA	0.600%	$ 0.38	$ 0.57	$ 0.76
MTA	0.340%	$ 0.22	$ 0.32	$ 0.43
Disability	0.000%	$ -	$ -	$ -
NY Unemployment	8.330%	$ 5.29	$ 7.93	$ 10.57
Total Payroll Taxes		**$ 10.74**	**$ 16.10**	**$ 21.47**

Insurance	%	$	$	$
Worker's Comp	9.70%	$ 6.15	$ 9.23	$ 12.31
Other	0.00%	$ -	$ -	$ -
Total Insurance		**$ 6.15**	**$ 9.23**	**$ 12.31**

Total Labor Rate		**$145.01**	**$193.81**	**$242.58**
Mark-up Percentage Fee	15.00%	**$21.75**	**$29.07**	**$36.39**
Total Billing Rate		**$166.77**	**$222.88**	**$278.97**

Suffolk Construction
Regeneron TTCX Loop Road Project

rev1

Contractor Name	**Verde Electric Corporation**
Labor Classification	Journeyman
Union Affiliation	Local #3 North
Labor Rate Effective Until:	4/16/2026

Labor Rate Active

Summary -- Labor Rates					
	ST	OT	Holiday (If Applicable)	PT Differential	Holiday Differential (If Applicable)
Rate	$ 155.93	$ 207.89	$ 259.82	$ 51.95	$ 103.89

Instructions: Enter cells in yellow. Cells in blue are automatically calculated by multiplying the inputted percentage by the Base Rate. Trade Partner is free to modify the formulas in blue cells or hard enter as necessary. Subtotals and totals are automatically calculated and summarized above.

DETAIL

Description	Straight Time	Overtime	Holiday Time (If applicable)
Base Rate	$ 58.75	$ 88.13	$ 117.50

Benefits (Union and Non-Union) - *Provide itemized list of benefits. If Union Affliated, provide Union Agreements as part of your labor rate submission.*

	%	$	$	$
Joint Industry Board	2.450%	$ 1.44	$ 1.44	$ 1.44
Pension, Hospitalization, and Benefit Plan	39.450%	$ 23.18	$ 23.18	$ 23.18
Pension, Hospitalization, and Benefit Plan	$ 6.00	$ 6.00	$ 6.00	$ 6.00
Dental Fund	3.140%	$ 1.84	$ 1.84	$ 1.84
NEBF	3.000%	$ 1.76	$ 2.64	$ 3.53
Annuity Fund	$ 4.50	$ 4.50	$ 4.50	$ 4.50
Health Reimbursement Fund	$ 7.00	$ 7.00	$ 7.00	$ 7.00
Vacation, Holiday, Unemployment Plan	$ 0.31	$ 0.31	$ 0.31	$ 0.31
Deferred Salary Plan (401k)	23.650%	$ 13.89	$ 20.84	$ 27.79
Educational & Cultural Trust Fund	1.670%	$ 0.98	$ 0.98	$ 0.98
EESISP	0.500%	$ 0.29	$ 0.44	$ 0.59
		$ -	$ -	$ -
		$ -	$ -	$ -
		$ -	$ -	$ -
		$ -	$ -	$ -
		$ -	$ -	$ -
		$ -	$ -	$ -
		$ -	$ -	$ -
		$ -	$ -	$ -
		$ -	$ -	$ -
		$ -	$ -	$ -
Total Benefits		**$61.20**	**$69.18**	**$77.15**

Payroll Taxes - *Payroll taxes will properly reflect the federal and state payroll tax wage limitations establishing the annual maximum wages subject to payroll taxes*

	%	$	$	$
FICA/Social Security	7.650%	$ 4.49	$ 6.74	$ 8.99
SUI	0.000%	$ -	$ -	$ -
Medicare	0.000%	$ -	$ -	$ -
FUTA	0.600%	$ 0.35	$ 0.53	$ 0.71
MTA	0.340%	$ 0.20	$ 0.30	$ 0.40
Disability	0.000%	$ -	$ -	$ -
NY Unemployment	8.330%	$ 4.89	$ 7.34	$ 9.79
Total Payroll Taxes		**$ 9.94**	**$ 14.91**	**$ 19.88**

okay

Insurance	%	$	$	$
Worker's Comp	9.70%	$ 5.70	$ 8.55	$ 11.40
Other	0.00%	$ -	$ -	$ -
Total Insurance		**$ 5.70**	**$ 8.55**	**$ 11.40**
Total Labor Rate		**$135.59**	**$180.77**	**$225.93**
Mark-up Percentage Fee	15.00%	**$20.34**	**$27.12**	**$33.89**
Total Billing Rate		**$155.93**	**$207.89**	**$259.82**

89 Edison Avenue
Mt Vernon, New York 10550
Phone 914-664-7000
Facsimile 914-668-7997

Change Order Request

6521 — Regeneron TTCX

COR Subject: Light pole

To
Richard Alcaro
Suffolk Construction

Return To
Michael Lentini
Verde Electric Corp
mlentini@verdeelectric.com

COR Number: **6521-VEC-024**
COR Revision Number: **0**
COR Date: 11/19/2025
Work Type: Field Work Order / T&M
Days Valid: **5**

Details

Description	Cost / Rate	Qty / Hrs	Workers	Ext	
Round Tapered Steel Pole, 20 FT	($567.70)	1.00	-	$-567.70	ok
Delivery	($800.00)	1.00	-	$-800.00	ok

Breakout

This is the credit to replace the light pole that was damaged at the TY.

Material :	($567.70)
Other :	($800.00)
Total:	**($1,367.70)** ok

Reservation of Rights

This COR does not include any amount for impacts such as interference, disruptions, rescheduling, changes in the sequence of work, delays and/or associated acceleration. We expressly reserve the right to submit our request for any of these items.
Verde Electric Corp reserves all rights under the Prime Contract, Subcontract, at law, and inequity. Verde Electric Corp further reserves all right to supplement the information contained in this letter."

Signed By: _____

Dated: 11/19/2025

ROUND TAPERED STEEL POLE, 20FT HEIGHT, 6" DIAMETER, 11 GAUGE, DARK BRONZE FINISH

No reviews yet | Write a Review | Ask Questions

Note: Product images are for illustration purposes only. Do not rely on product image alone to make a purchase decision. Actual product may vary due to specific configurations. Always refer to spec sheets for details.

$567.70

SKU: WSD-TPR20FT6-11G-D MPN: TPR20FT6-11G-D Shipping: Calculated at Checkout

Light poles are excluded from the free freight offer. Expect freight costs of at least $800. Please submit a quote request for the quantity you are interested in and a customer service representative will contact you with an accurate quotation.

QUICK OVERVIEW

20FT Round Tapered Steel Pole with 6" diameter, 11 gauge thickness, and dark bronze finish. Ideal for area lighting with multiple mounting options.

QTY 1

ADD TO QUOTE

ADD TO PROJECT LIST

COMPARE

Round Tapered Steel pole

WSD LED INC
Green Lighting Resources

Size: 6″ (6″ dia.), 6.5″ (6.5″ dia.), 7″ (7″ dia.)

(NOTE: BASE COVER, ANCHOR KIT, POSITION PLATE & ACCESSORIES SOLD SEPARATELY)

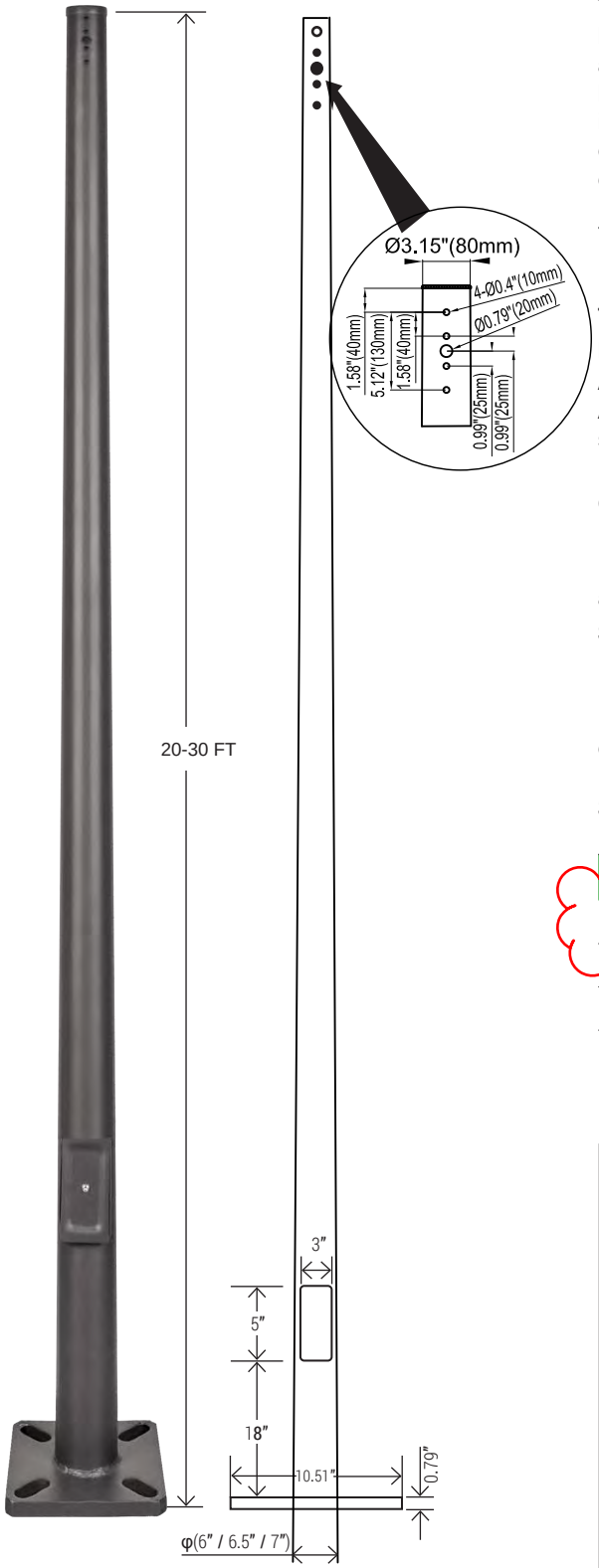

The WSD LED INC Series Round Tapered Steel poles are built from high strength steel tube and are available side drilled for arm mounted area lighting luminaires or with tenon mounts for flood and post top luminaires. Typical area lighting applications include retail centers, industrial parks, schools and universities, public transit and airports, office buildings and medical facilities. Mounting heights of 20 to 30 feet can be used based on selected luminaire application.

FEATURES

FINISH:
Textured architectural bronze powder-coat finish, baked to ensure maximum paint adhesion, hardness and durability.

ANCHOR BOLTS:
Anchor bolts are not included, sized based on pole data charts for the selected pole size.

HAND HOLE:
Cast iron reinforced hand hole and cover with ground screw.

BASE COVER:
Poles are provided with a two-piece formed steel base cover that is easily assembled and fitted over pole base.

SURFACE TREATMENT: Hot-dip galvanizing.

POLE LENGTH:
Poles are available in standard lengths as shown in the order matrix. Poles can be custom cut to order. Consult factory.

SPECIFICATIONS: Conforms to ASTM-A 500 Grade B: Minimum Yield Strength of 46,000 PSI.

SPECIFICATION	20FT	25FT	30FT
WSD-TPR20FT6-11G-D			
WSD-TPR25FT6.5-11G-D	L = 6.1 (m)	L = 7.6 (m)	L = 9.1 (m)
WSD-TPR30FT7-7G-D			

MOUNTING OPTIONS

SIDE MOUNT: Standard length poles are predrilled (2@180º), with a polycarbonate top cover and hole plugs for unused predrilled locations.

Note: When using Arm or Slip-Fitter Mounts, additional installation parts may be required to ensure proper installation. (example: Round Bar Adapter with Arm Mount or Horizontal Tenon Arc Adapter with Slip-Fitter Mount) *see: additional installation parts for more options*

TOP MOUNT: Round Pole Tenon Adapters (Optional) can be installed for a use with a Slip-Fitter or Multi-Fixture installation requiring Bullhorns, Spokes etc. (4"RND to 2 3/8" Round Tenon Adapters available)

Round Tapered Steel pole

WSD LED INC
Green Lighting Resources

Size: 6″ (6″ dia.), 6.5″ (6.5″ dia.), 7″ (7″ dia.)

DIMENSION

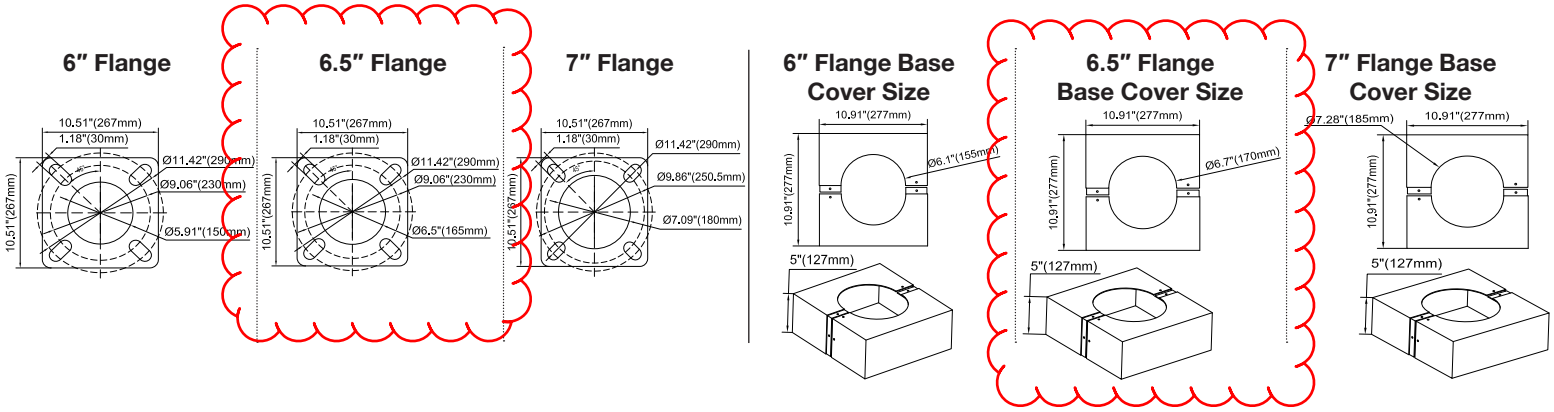

DIMENSION DATA

CATALOG	HEIGHT	GAUGE	SIZE	BOLT SIZE	WEIGHT (LBS)	EPA 70	EPA 80	EPA 90	EPA 100	EPA 110	EPA 120	EPA 130	EPA 140	EPA 150	EPA 160
WSD-TPR20FT6-11G-D	20ft	11	6″ dia.	M0.75″X 19.69″X 3.94″	123	13.9	11.1	10.8	8.8	7.5	5.8	4.6	3.2	2.0	1.1
WSD-TPR25FT6.5-11G-D	25ft		6.5″ dia.		163	12.9	9.9	8.7	7.3	6.6	5.1	4.2	2.8	1.4	NG
WSD-TPR30FT7-7G-D	30ft	7	7″ dia.	M0.95″X 36″X4″	300	10.5	8.8	7.9	6.5	5.4	4.4	3.7	2.4	1.2	NG

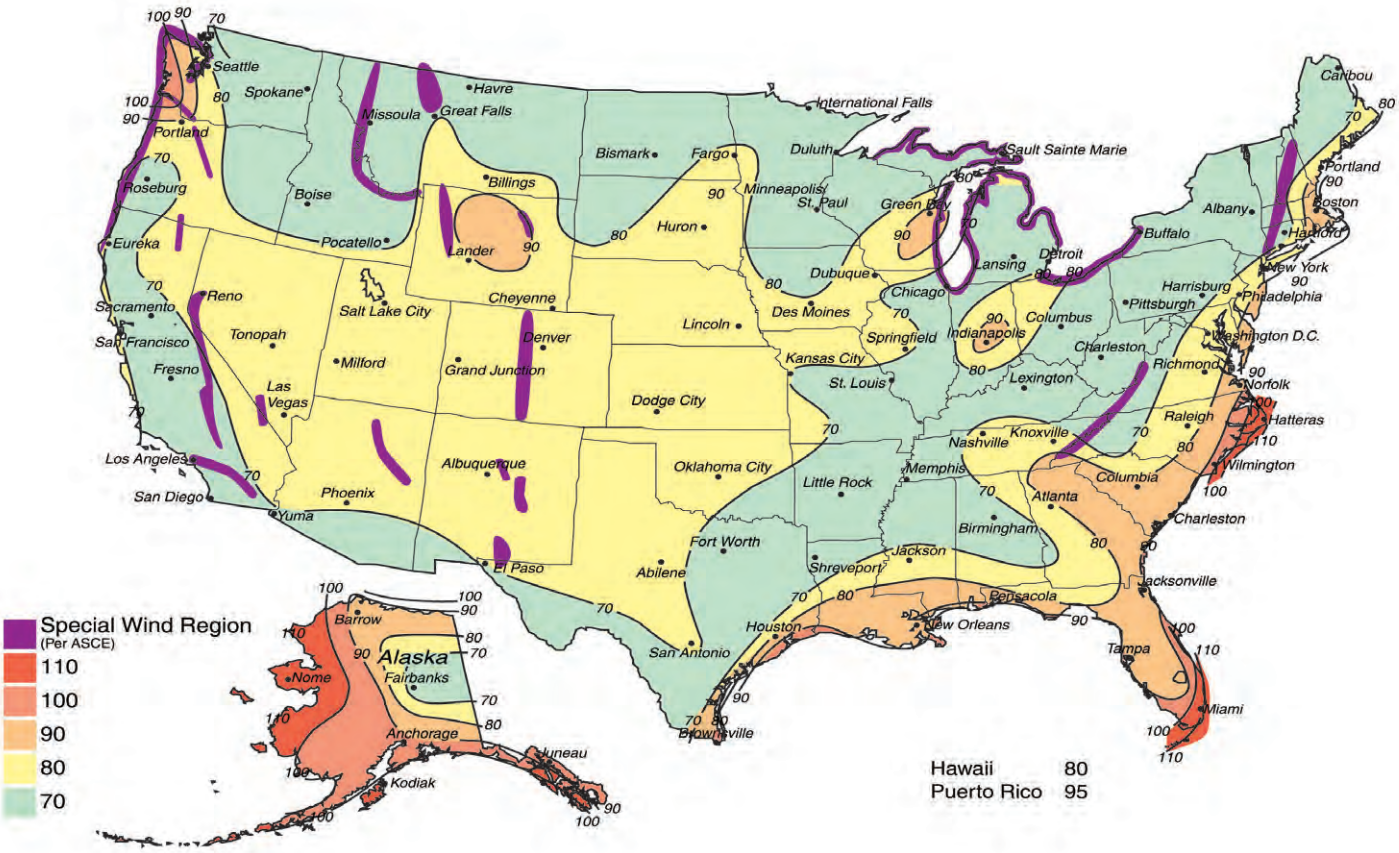

Address: 1250 Wattley Way, Suite 100, McKinney, TX 75069
Email: leo.zhu@wisdom-ssl.com • **Tel:** 469.857.5693 / 214.940.9558

Round Tapered Steel pole

WSD LED INC
Green Lighting Resources

Size: 6″ (6″ dia.), 6.5″ (6.5″ dia.), 7″ (7″ dia.)

ORDERING INFORMATION

EXAMPLE: **WSD-TPR20FT6-11G-D**

WSD	TPR	20 FT	6	11G	D
COMPANY	PRODUCT	GROUND HEIGHT	SIZE	THICKNESS	FINISH
WSD LED INC	Round Tapered Steel pole	**20FT -** (6.1 M) **25FT -** (7.6 M) **30FT -** (9.1 M)	**6 -** (Bottom Caliber φ 6″) **6.5 -**(Bottom Caliber φ 6.5″) **7 -** (Bottom Caliber φ7″)	**11G -** (11 gauge) **7G -** (7 gauge)	**D** - (Dark Bronze) **W** - (White) **B** - (Black) **G** - (Grey)

FIXTURE CONFIGURATIONS

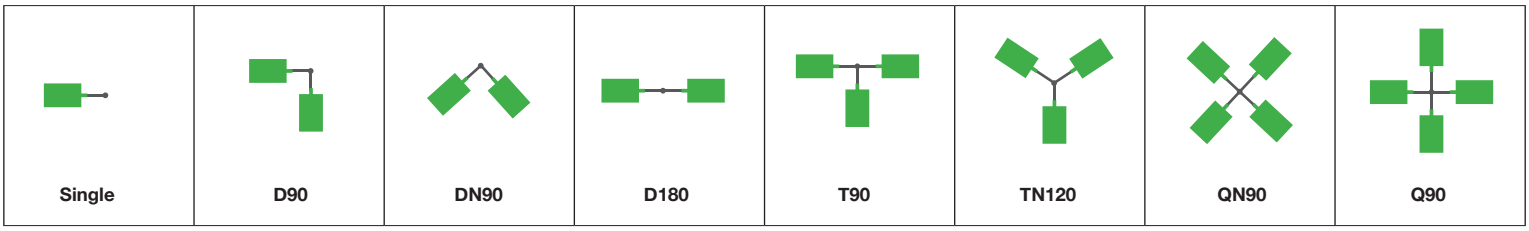

INSTALLATION

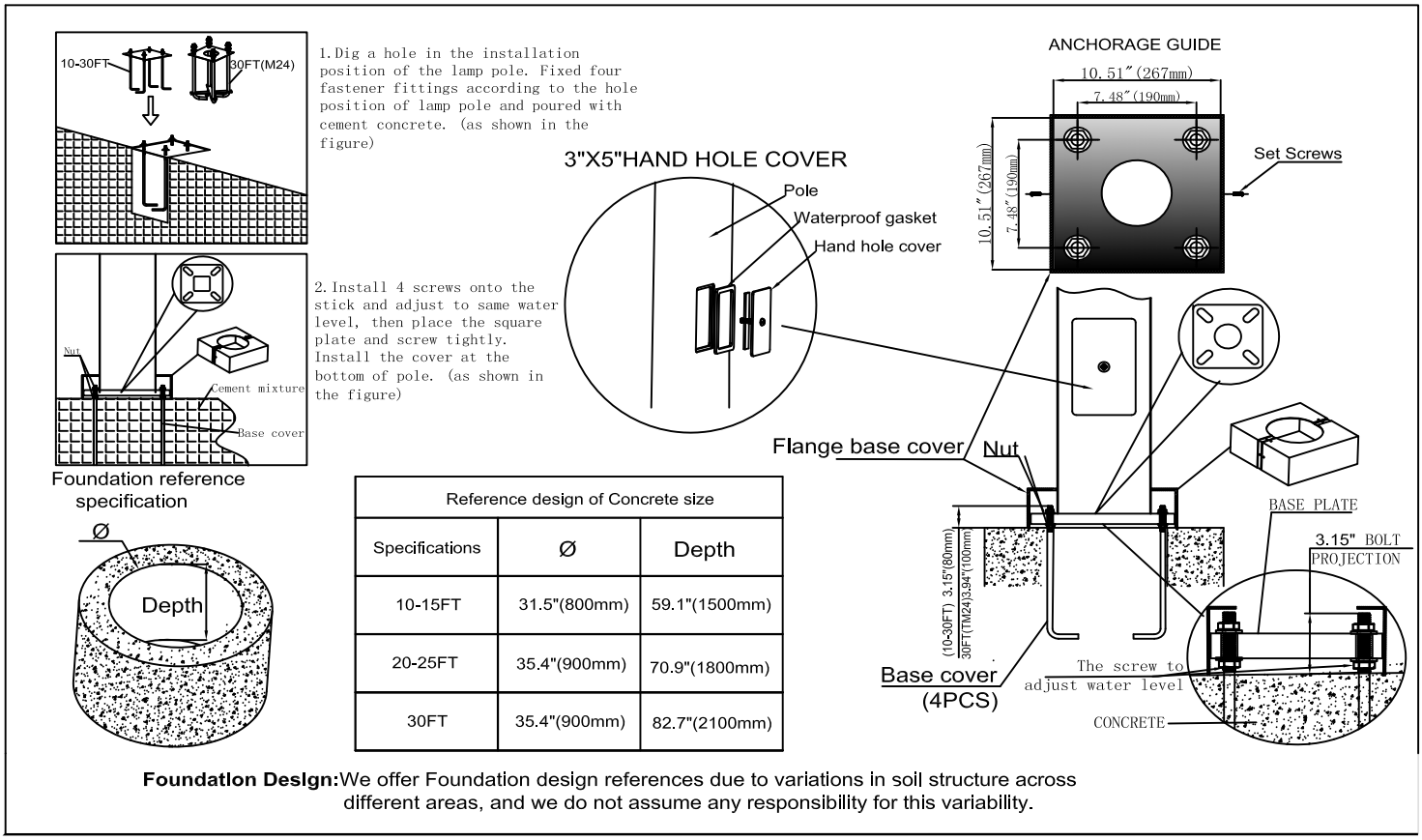

Reference design of Concrete size		
Specifications	Ø	Depth
10-15FT	31.5"(800mm)	59.1"(1500mm)
20-25FT	35.4"(900mm)	70.9"(1800mm)
30FT	35.4"(900mm)	82.7"(2100mm)

Foundation Design: We offer Foundation design references due to variations in soil structure across different areas, and we do not assume any responsibility for this variability.

89 Edison Ave, Mt Vernon, NY 10550
914-664-7000

Incident Alert: Property Damage to Light Pole

Date of Incident: Oct. 8, 2025

Project Name: Regeneron Transformer Yard

Description: While backing up a masonry vendor struck a light pole and knocked it off its footing. See details below in SLI's report

SHAWN'S LAWNS INC.

EXCAVATION CONTRACTORS

Incident Alert: Light Pole Property Damage

Date of Incident: 10/08/2025 09:20AM

Project Name: Regeneron

Description (What Happened):

Picking up excess material from the job, Reversing truck into site for pickup

Statement: Palumbo Material Supplier employee ([redacted]) backed into site without spotter. Reversed into light pole, breaking light pole of base and knocking light pole down. Driver acknowledged not seeing light pole in mirrors when reversing.

Contributing Factors (Why did the incident happen?):

- No spotter
- Did not call anyone onsite
- SLI onsite staff or management was not notified of pickup
- Rain
- Rushing

Positive Factors:

- No one was hurt
- Light pole was safed off right away
- Light pole had no electric current

Corrective Measures:

- Suffolk safety team was notified
- Light pole has been moved, and base is now chained off from access

Incident Report written by Ethan Romero

470 West Avenue Stamford, Connecticut 06905
Phone (203) 322-3100 / Fax (203) 332-7737